CEPRO®

LEADING IN WELDING SAFETY

CATALOGUE
CONSTRUCTION

TABLE OF CONTENTS

General information	3
Quality	4
Swivel arms	5
Swivel arms supports	16
Poles	18
Columns	20
Rail system	22
Tube system	26
Cable reel	30

CEPRO®
LEADING IN WELDING SAFETY

GENERAL INFORMATION

Protection

Designing a good workplace for welders and grinders and preventing risks are the primary prerequisites for any company or organization involved in professional welding. In addition to these social and humane aspects, there are also factors such as, reducing injuries and sickness absence of welders and other workers, reducing fire hazard and the potential loss of production due to damage, all of which should be taken into account. Maximum protection of workers against the risks involving welding light, noise and heat are essential for responsible management.

CEPRO is a specialist in designing safe welding and grinding work areas and can provide a comprehensive range of products and services. CEPRO products not only increase the safety of the working area, but they also increase efficiency resulting in an improved workflow and cost-savings.

CEPRO products are the result of years of experience in the design and equipping of safe welding and grinding work areas. Our products comply with all the currently applicable standards and regulations, including several subfields.

This section explains how different construction items can be used to build the available systems. Our CEPRO team has years of experience and knowledge to help you and are available for your questions without any obligation. Feel free to contact us for more information.

Construction

Our range of products includes a large variety of fastening material and suspension systems.

QUALITY

CEPRO can provide a wide range of services and products. All products requiring a NEN certification have been approved.

The construction products you choose to optimize your (business) processes deserve special attention. This concerns, among other things, the specific harmonization of individual components.

Through years of experience in the development and manufacture of its products CEPRO has gained expertise in the use of individual products and their overall application. During the product testing phase, CEPRO subjects its products to simulated practical situations to conform to predetermined standards.

A construction item is only released for use after the quality requirements have been guaranteed. CEPRO sets out clear construction principles and puts these into practice.

CEPRO guarantees, on the basis of product certifications and its reliable expertise, that the structures provided deliver the maximum possible efficiency.

CEPRO®
LEADING IN WELDING SAFETY

SWIVEL ARMS & POLES

CEPRO offers an extensive range of swivel arms, columns and poles making it possible to combine a wide variety of protection items and booths. CEPRO swivel arms, columns and poles are characterized by their excellent quality and ease of use. You can find the appropriate arm, column or pole and its related support for each application. We are ready to meet your special requirements. Please consult our sales department.

Available types

- Pipe swivel arm
- Modular swivel arm
- Swivel heavy duty arm
- Swivel joint arm
- Columns and poles in rectangular pipe
- Columns

Technical information

It is important to check all connecting parts of the swivel arm periodically. Further technical specifications are provided with with description of each product.

CEPRO PIPE SWIVEL ARM

- 180 ° pivotable
- Round tube 35mm Ø
- Assembly plate included
- Finished grey RAL 7035 powdercoating

For all swivel arms special conditions apply. The freight charges will be calculated and invoiced separately on each order.

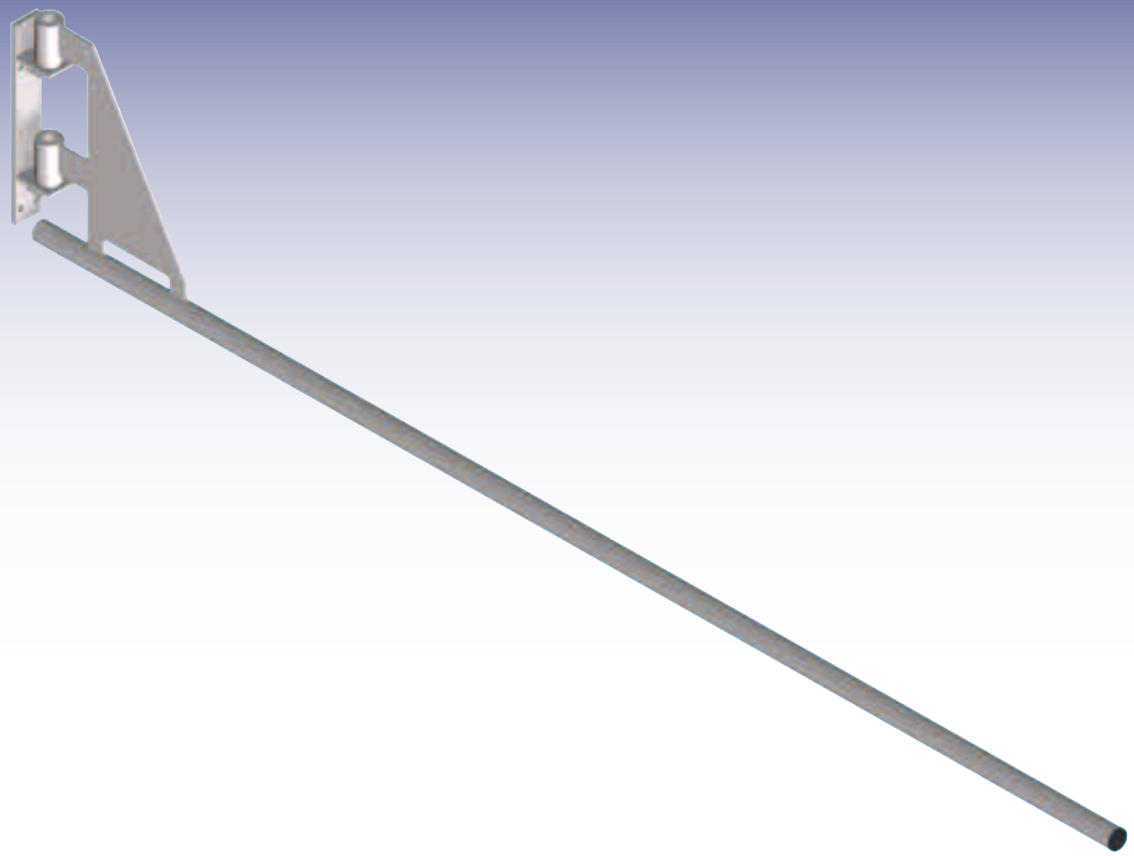

CEPRO PIPE SWIVEL ARM 200 CM

Maximum length 2 meter, produced from tube of 35mm Ø. This product is finished with a grey (RAL 7035) powdercoating. Fitted with a mechanical hinge and an assembly plate for fixing the arm against a wall or column.

82.10.15

Radius	: 208cm
Range	: 180 °
Height	: 36cm
Max. static load	: 190 N
Max. dynamic load	: 250 N
Control	: manually

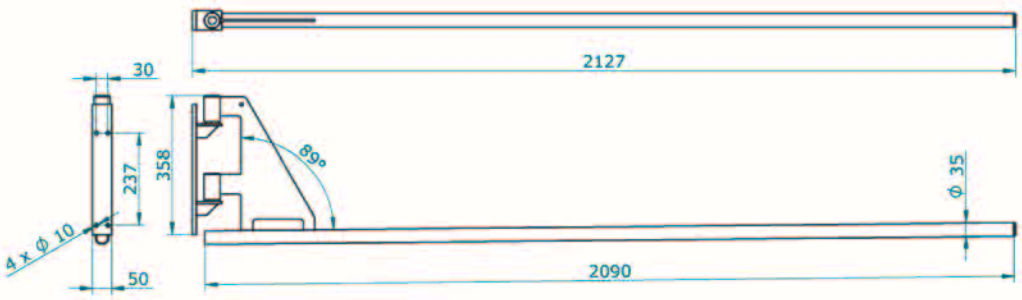

CEPRO®
LEADING IN WELDING SAFETY

CEPRO PIPE SWIVEL ARM

- 180 ° pivotable
- Round tube 35mm Ø
- Assembly plate included
- Finished grey RAL 7035 powdercoating

For all swivel arms special conditions apply. The freight charges will be calculated and invoiced separately on each order.

CEPRO PIPE SWIVEL ARM

The CEPRO pipe swivel arm is easy to install by means of the mounting plate and easy to handle.

Further this modell swivel arm can simply be cut to the required length.

CEPRO MODULAR SWIVEL ARM

- 180° Pivotable
- Rectangular tube 50 x 50mm
- Assembly plate included
- Fitted with a brake system
- Finished grey RAL 7035 powdercoating

For all swivel arms special conditions apply. The freight charges will be calculated and invoiced separately on each order.

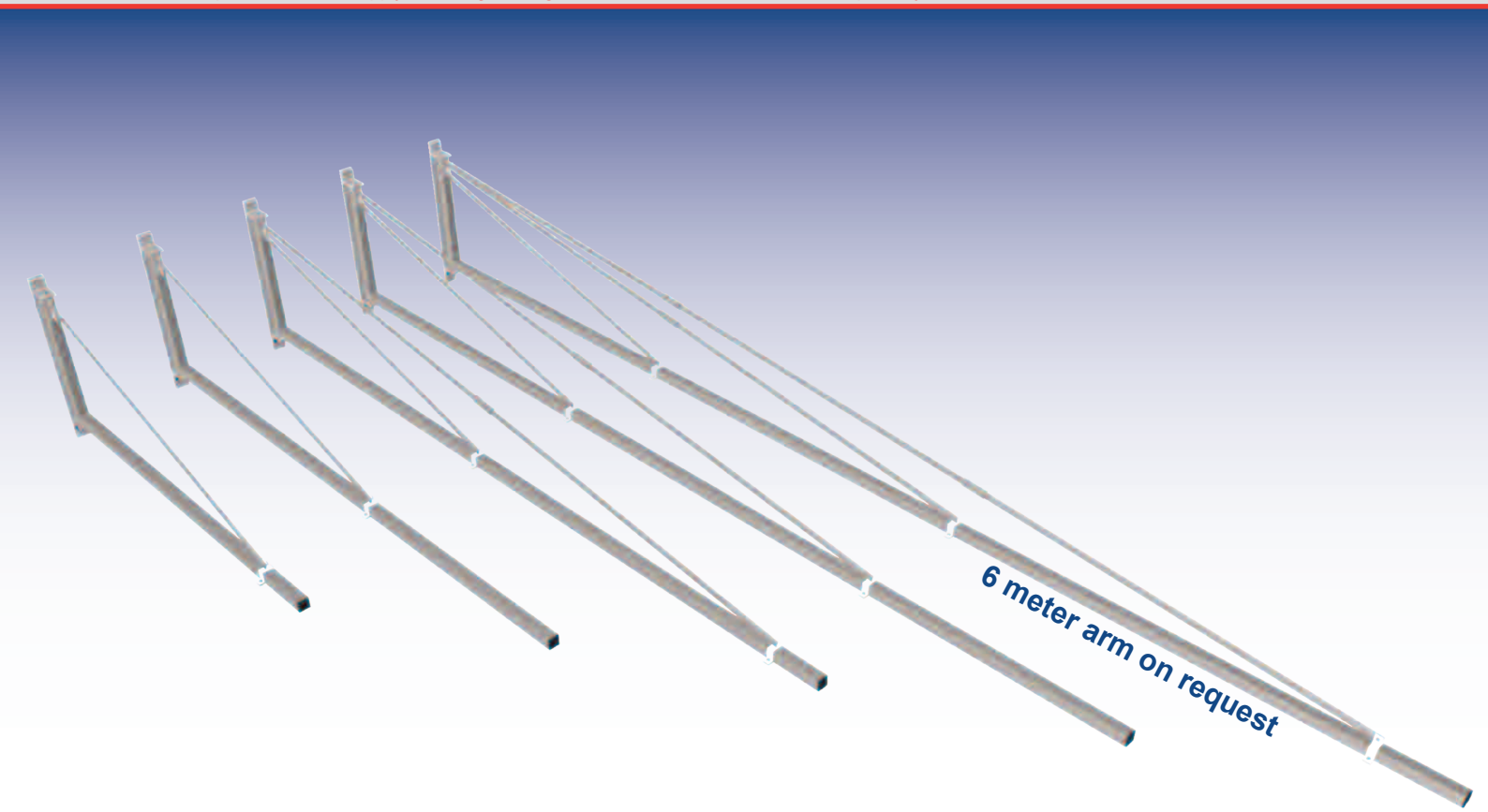

CEPRO MODULAR SWIVEL ARM 200CM

Produced from a rectangular tube 50 x 50mm. This product is finished with a grey (RAL 7035) powdercoating. The swivel arm is fitted with a brake system and an assembly plate for fixing the arm against a wall or column.

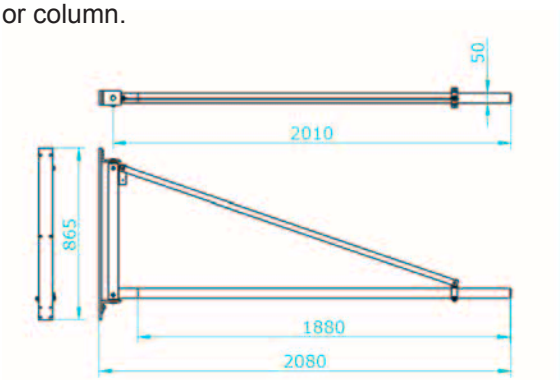

82.10.30.0200

Radius	: 208cm
Range	: 180°
Height	: 87cm
Max. static load	: 500 N
Max. dynamic load	: 650 N
Control	: manual

CEPRO®
LEADING IN WELDING SAFETY

CEPRO MODULAR SWIVEL ARM

- 180° Pivotable
- Rectangular tube 50 x 50mm
- Assembly plate included
- Fitted with a brake system
- Finished grey RAL 7035 powdercoating

For all swivel arms special conditions apply. The freight charges will be calculated and invoiced separately on each order.

CEPRO MODULAR SWIVEL ARM 300CM

Produced from a rectangular tube 50 x 50mm. This product is finished with a grey (RAL 7035) powdercoating. The swivel arm is fitted with a brake system and an assembly plate for fixing the arm against a wall or column.

Radius	: 299cm
Range	: 180°
Height	: 87cm
Max. static load	: 450 N
Max. dynamic load	: 600 N
Control	: manual

82.10.30.0300

CEPRO MODULAR SWIVEL ARM 400CM

Produced from a rectangular tube 50 x 50mm. This product is finished with a grey (RAL 7035) powdercoating. The swivel arm is fitted with a brake system and an assembly plate for fixing the arm against a wall or column.

Radius	: 389cm
Range	: 180°
Height	: 87cm
Max. static load	: 400 N
Max. dynamic load	: 550 N
Control	: manual

82.10.30.0400

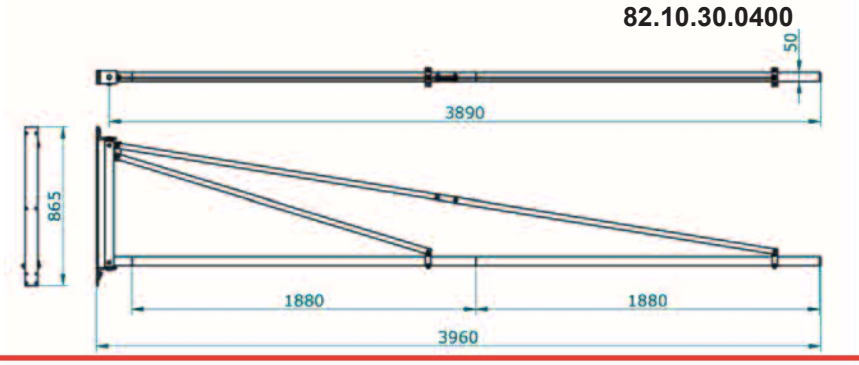

CEPRO MODULAR SWIVEL ARM 500CM

Produced from a rectangular tube 50 x 50mm. This product is finished with a grey (RAL 7035) powdercoating. The swivel arm is fitted with a brake system and an assembly plate for fixing the arm against a wall or column.

Radius	: 487cm
Range	: 180°
Height	: 87cm
Max. static load	: 350 N
Max. dynamic load	: 480 N
Control	: manual

82.10.30.0500

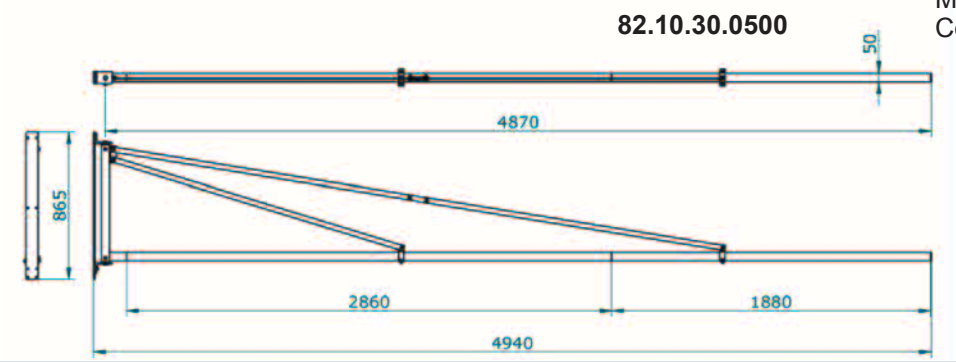

CEPRO SWIVEL ARM HEAVY DUTY

- Suitable for heavy loads
- Rectangular tube 50 x 50mm
- Fitted with a mechanical lock
- Finished grey RAL 7035 powdercoating

For all swivel arms special conditions apply. The freight charges will be calculated and invoiced separately on each order.

CEPRO SWIVEL ARM HINGED 600CM

Swivel arm, 6 meter (4 + 2 meters), made with a double girder 50 x 50 mm. This first part swivels in a block bearing and has a mechanical lock. The second part has an adjustable brake system. This part has a maxium radius of 2 x 112°

82.10.50

Radius	: 592 cm
Range	: 180 °
Height	: 99 cm
Max. static load	: 1) 700 N 2) 200 N
Max. dynamic load	: 1) 900 N 2) 250 N
Control	: manual

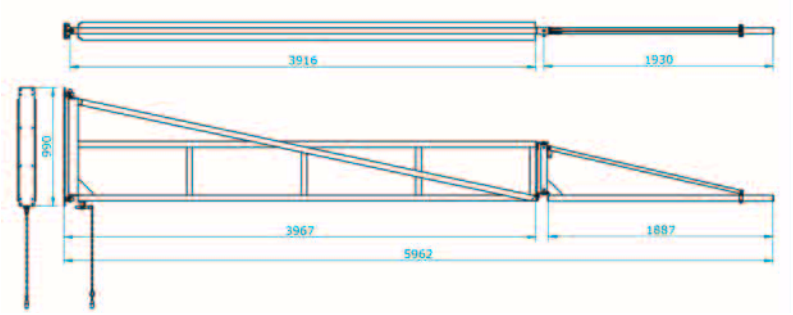

For fixing the arm against a wall a special assembly plate (82.10.43) should be ordered separately.

CEPRO®
LEADING IN WELDING SAFETY

CEPRO SWIVEL ARM HEAVY DUTY

- **Suitable for heavy loads**
- **Rectangular tube 50 x 50mm**
- **Fitted with a mechanical lock**
- **Finished grey RAL 7035 powdercoating**

For all swivel arms special conditions apply. The freight charges will be calculated and invoiced separately on each order.

CEPRO SWIVEL ARM 600CM

Swivel arm, maximum length 6 meter, girder made from rectangular tube 50 x 50mm. This arm is fitted with a hinge in a block bearing with and a mechanical lock.

82.10.45

Radius	: 597cm
Range	: 180°
Height	: 99cm
Max. static load	: 500 N
Max. dynamic load	: 650 N
Control	: manual

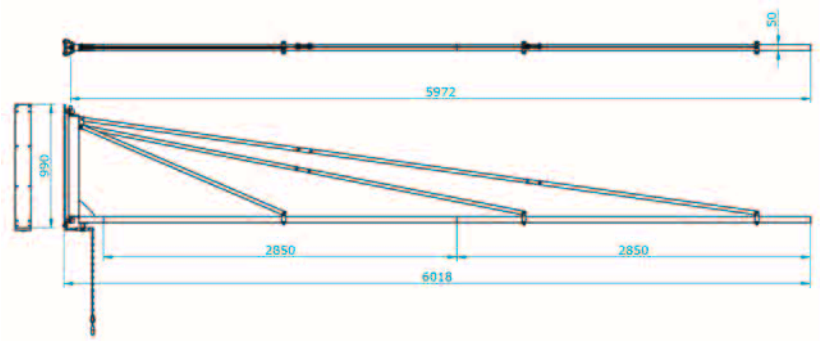

For fixing the arm against a wall a special assembly plate (82.10.43) should be ordered separately.

ASSEMBLY PLATE

Assembly plate for swivel arm 82.10.50 or 82.10.45

Dimensions; 990 x 130mm

Before mounting always check if the wall or column is suitable to bear the load of the swivel arm. Only use fastners that are suitable to use on the wall or columns.

82.10.43

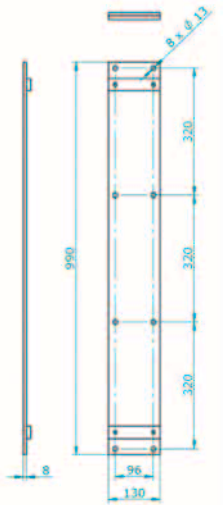

CEPRO SWIVEL ARM 400CM

Swivel arm, maximum length 4 meter, double girder made from rectangular tube 50 x 50mm. This arm is fitted with a hinge in a block bearing with and a mechanical lock. **82.10.51**

Radius	: 397cm
Range	: 180°
Height	: 99cm
Max. static load	: 800 N
Max. dynamic load	: 1000 N
Control	: manual

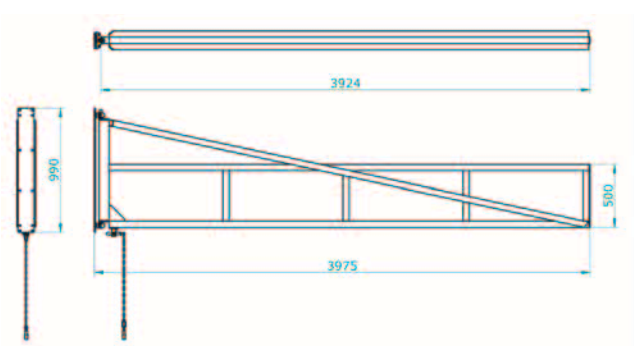

For fixing the arm against a wall a special assembly plate (82.10.43) should be ordered separately.

CEPRO SWIVEL JOINT ARM

- Completely foldable with 2 joints
- Fitted with a brake system
- Finished grey RAL 7035 powdercoating

For all swivel arms special conditions apply. The freight charges will be calculated and invoiced separately on each order.

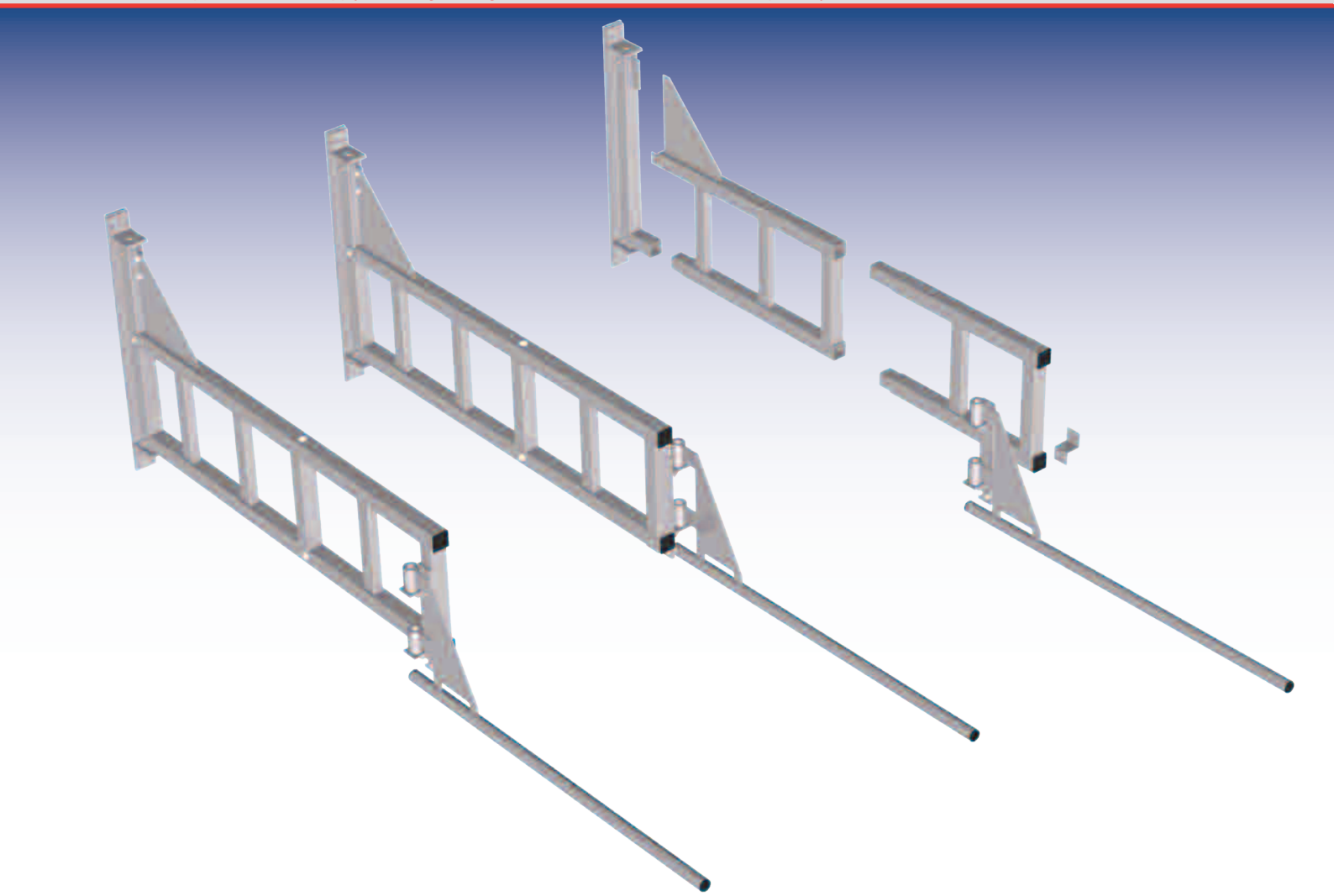

CEPRO SWIVEL JOINT ARM

Foldable swivel arm, with 2 joints. The first part has a adjustable brake system. This swivel arm can be extended with parts of 60cm, with a maximum length of 211cm. This product is finished with a grey (RAL 7035) powdercoating.

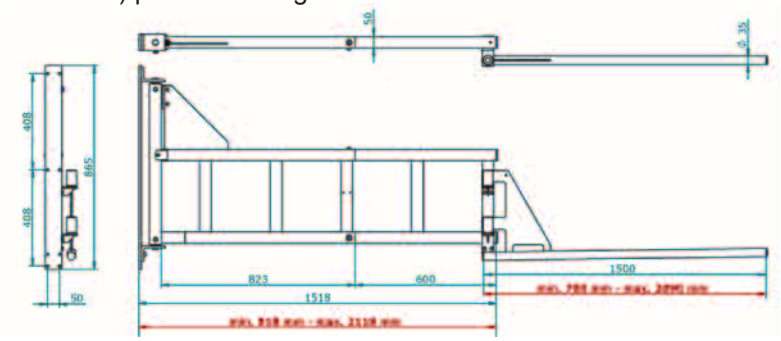

Range	: 180°
Height	: 87cm
Max. static load	: 1) 400 N 2) 190 N
Max. dynamic load	: 1) 550 N 2) 240 N
Control	: manual

CEPRO®
LEADING IN WELDING SAFETY

CEPRO SWIVEL JOINT ARM

- Completely foldable with 2 joints
- Fitted with a brake system
- Finished grey RAL 7035 powdercoating

For all swivel arms special conditions apply. The freight charges will be calculated and invoiced separately on each order.

CEPRO SWIVEL JOINT ARM BASIC PART

This part consists of a hinge piece with mounting plate and the basic girder. The hinge is fitted with an adjustable brake system. Made from rectangular tube 50 x 50mm.

82.10.17.02

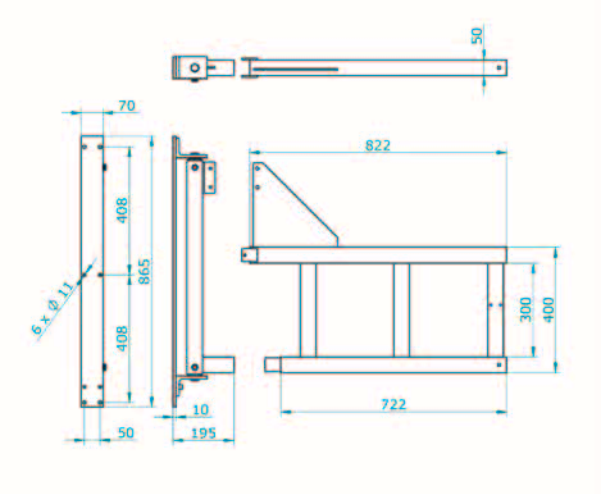

CEPRO SWIVEL JOINT ARM EXTENSION PART

The extension is prepared with a pre-drilled patern to fit directly to the basic girder and is extendable with a pipe swivel arm. Made from rectangular tube 50 x 50mm.

82.10.17.03

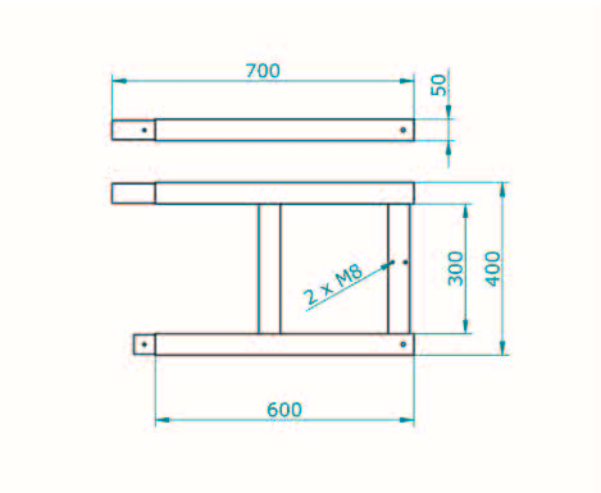

PIPE SWIVEL ARM FOR SWIVEL JOINT ARM

Maximum length 2 meter, produced from tube of 35mm Ø. This product is finished with a grey (RAL 7035) powdercoating. Fitted with a mechanical hinge and an assembly plate for fixing.

82.10.15

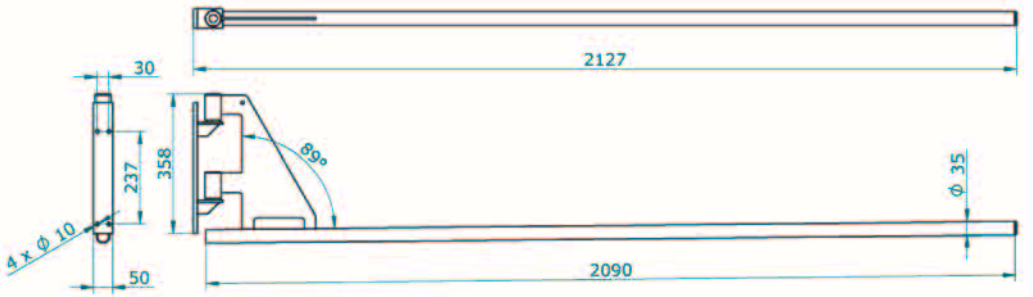

CEPRO TELESCOPIC SWIVEL ARM

- Retractable for free entrance
- Suitable for both curtains and strips
- Fitted with a brake system
- Finished grey RAL 7035 powdercoating

For all swivel arms special conditions apply. The freight charges will be calculated and invoiced separately on each order.

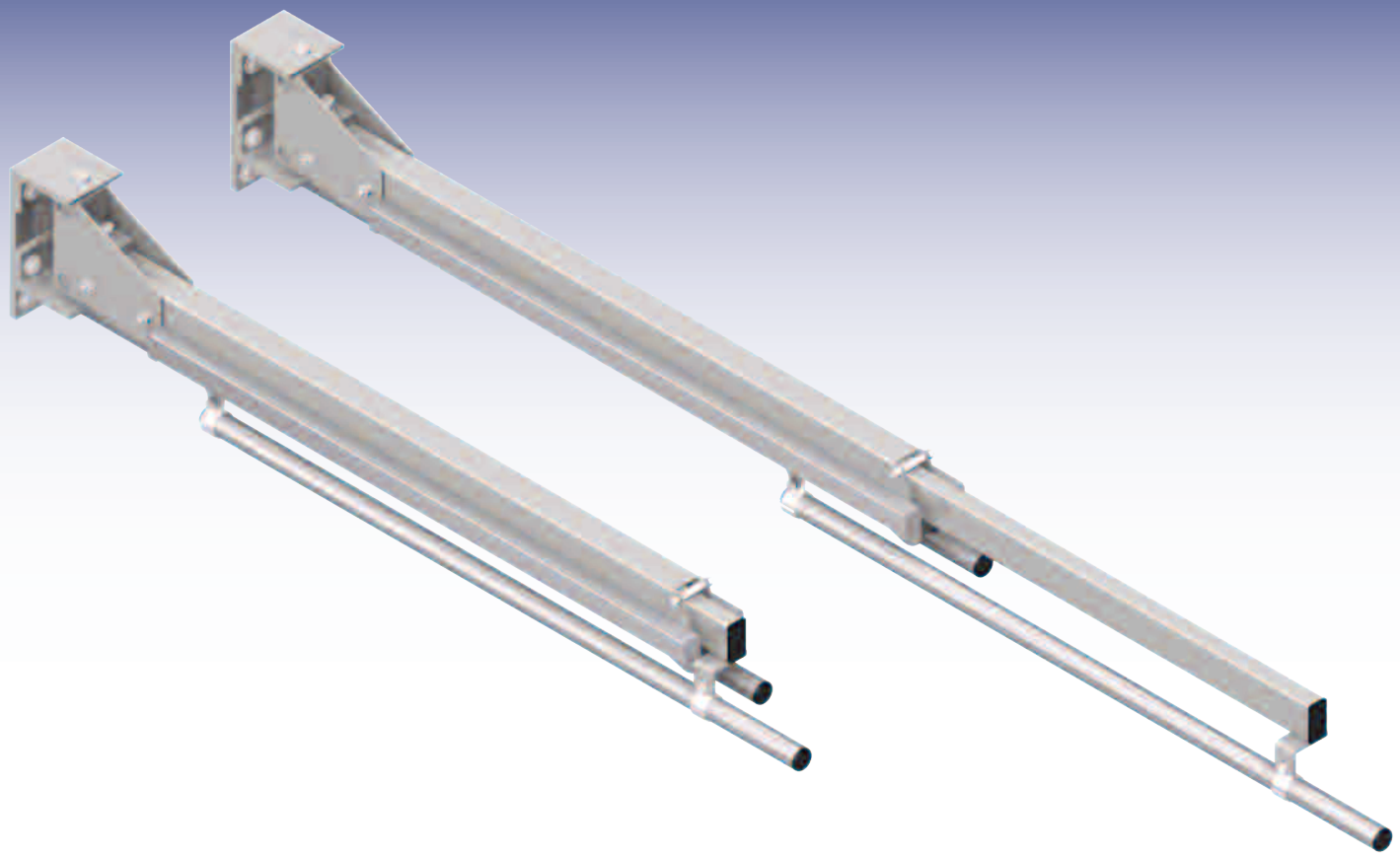

CEPRO TELESCOPIC SWIVEL ARM

This swivel arm is fitted with a telescope. The hinge of the arm is fitted with an adjustable brake. The swivel arm can be used with both strips and curtains, but is not suitable for heavy loads like a wire-box.

Radius	: variable
Range	: 180°
Height	: 30cm
Max. static load	: -
Max. dynamic load	: -
Control	: manual

On request

CEPRO®
LEADING IN WELDING SAFETY

CEPRO SUPPORTS FOR SWIVEL ARMS

- Suitable for swivel arms which are produced from rectangular tube 50 x 50mm.

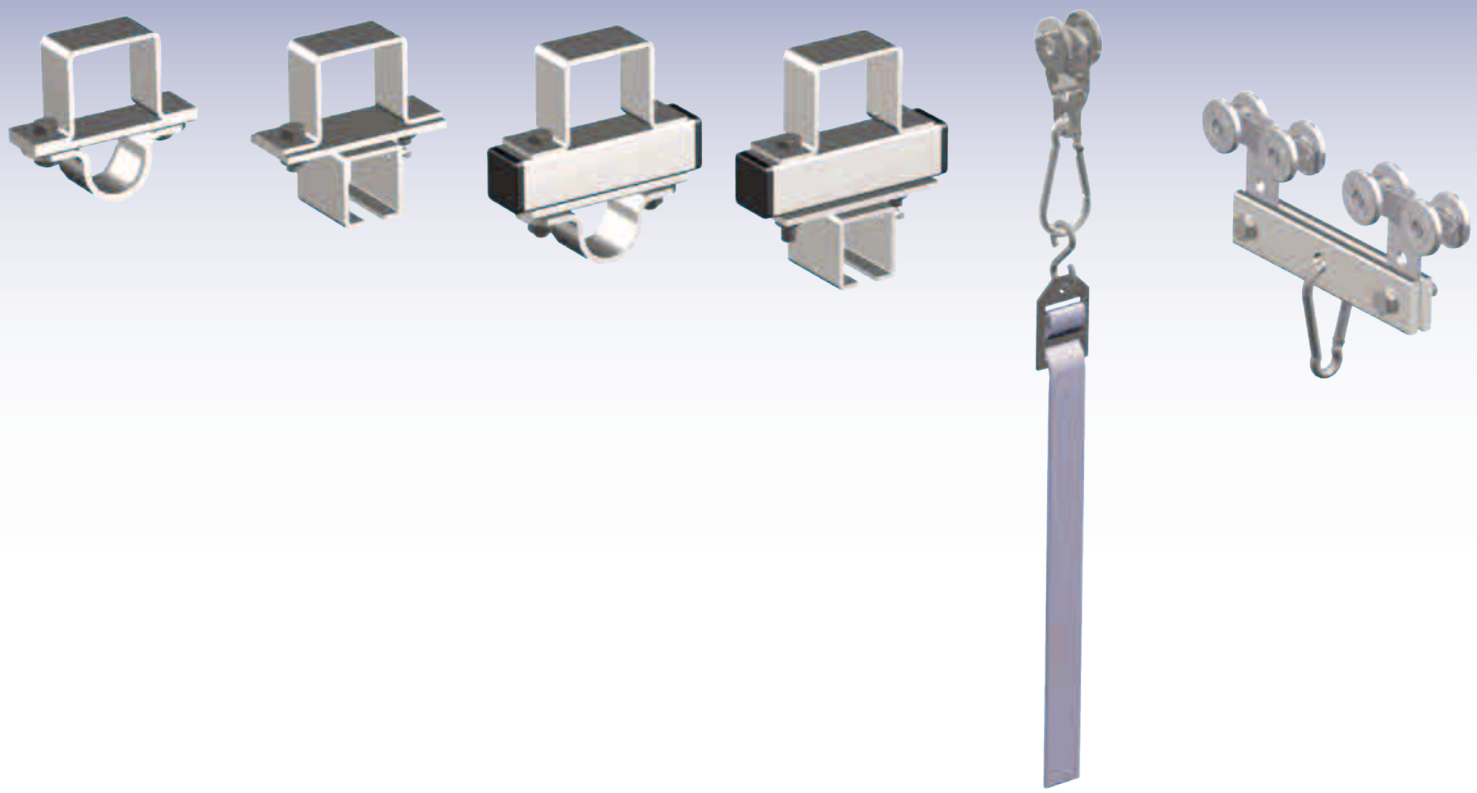

SET FOR FIXING TUBE UNDER SWIVEL ARM

Standard set for fixing a tube 33.7mm Ø under a swivel arm 82.10.45 + 82.10.50.

Supports are galvanized.

80.15.01

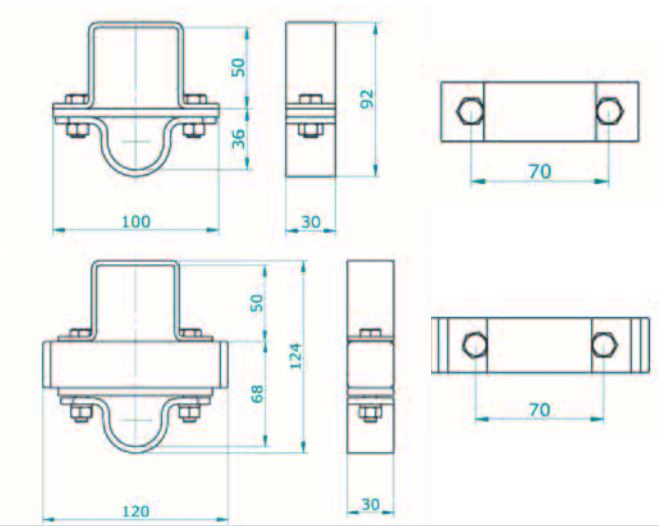

SET FOR FIXING TUBE UNDER SWIVEL ARM

Standard set for fixing a tube 33.7mm Ø under a swivel arm 82.10.30 + swivel joint arm

Supports are galvanized.

80.15.02

CEPRO SUPPORTS FOR SWIVEL ARMS

- **Suitable for swivel arms which are produced from rectangular tube 50 x 50mm.**

SET FOR FIXING RAIL UNDER SWIVEL ARM

Standard set for fitting rail 30 x 35mm under a swivel arm
82.10.45 + 82.10.50

Supports are galvanized.

80.15.10

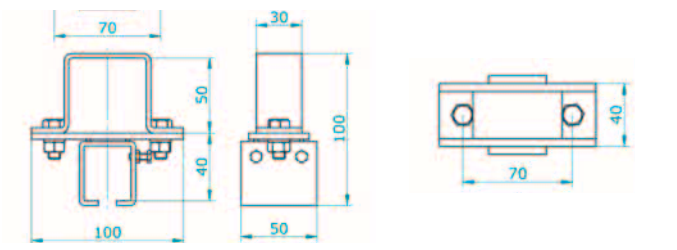

SET FOR FIXING RAIL UNDER SWIVEL ARM

Standard set for fitting rail 30 x 35mm under a swivel arm
82.10.30 + swivel joint arm

Supports are galvanized.

80.15.03

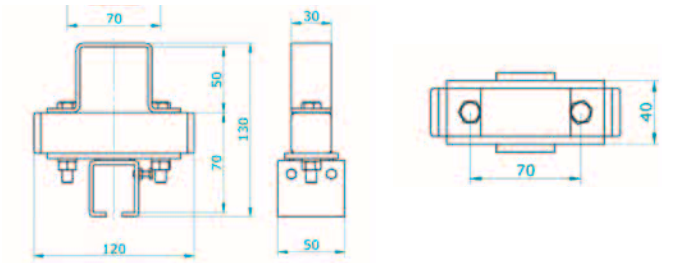

TAG WITH RUNNER

Tag with swivel for fitting hoses into rail system, including runner and snaphook. Tag is made from nylon.

80.10.05

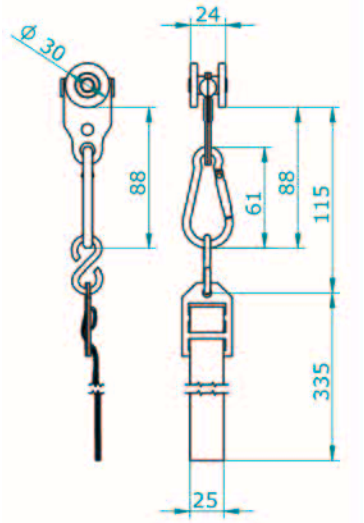

FIXING SET FOR WIRE-BOX

Set for fitting wire-box under a swivel arm, incl. runners, heavy-duty hook and chain with grip Maximum load 25kg.

82.01.02

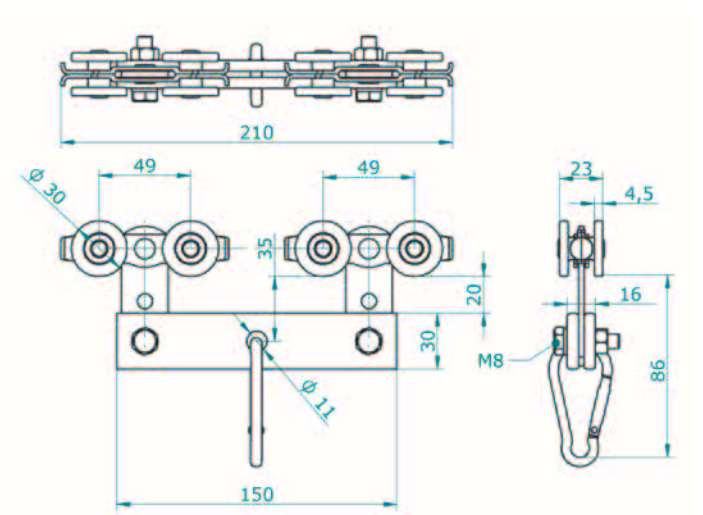

CEPRO POLES

- Made from rectangular profile
- Pre-drilled fixing holes for mounting several CEPRO supports
- Finished grey RAL 7035 powdercoating
- Made with a footplate for a stable fitting to the floor

For all columns and poles special conditions apply. The freight charges will be calculated and invoiced separately on each order.

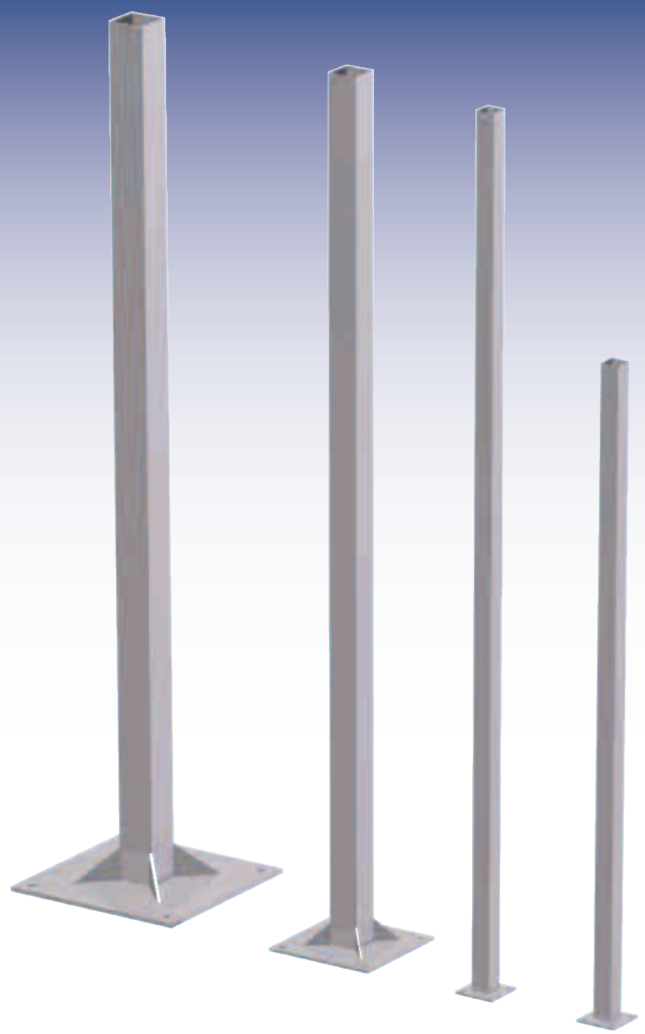

POLE 300CM

Pole, height 300cm, with a steel pole 100 x 100 x 4mm and a footplate 500 x 500 x 15mm One side with M10 pre-drilled fixing holes.

This product is finished with a grey (RAL 7035) powdercoating.

83.20.01.0300

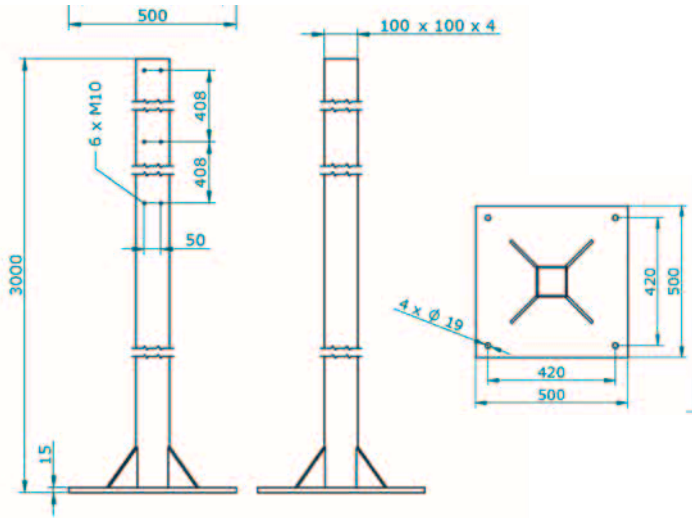

CEPRO®
LEADING IN WELDING SAFETY

CEPRO POLES

- Made from rectangular profile
- Pre-drilled fixing holes for mounting several CEPRO supports
- Finished grey RAL 7035 powdercoating
- Made with a footplate for a stable fitting to the floor

For all columns and poles special conditions apply. The freight charges will be calculated and invoiced separately on each order.

POLE 300CM

Pole, height300 cm, with a steel pole 80 x 80 x 3mm and a footplate 300 x 300 x 10mm. 3 sides with M8 pre-drilled fixing holes.

This product is finished with a grey (RAL 7035) powdercoating.

83.10.02.0300

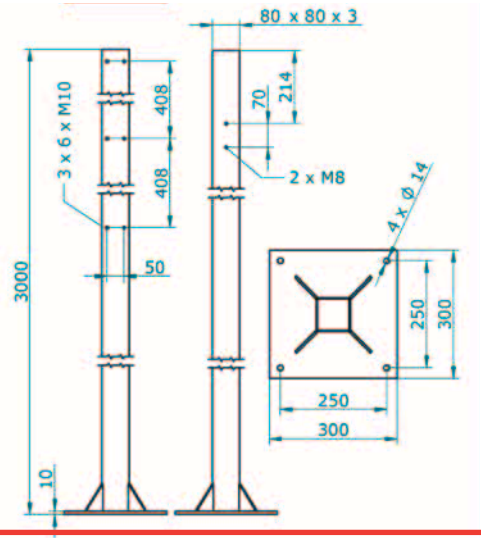

POLE 300CM

Pole, height 300cm, with a steel pole 50 x 50 x 2mm and a footplate 110 x 110 x 8mm. All sides with M8 pre-drilled fixing holes.

This product is finished with a grey (RAL 7035) powdercoating.

83.10.01.0300

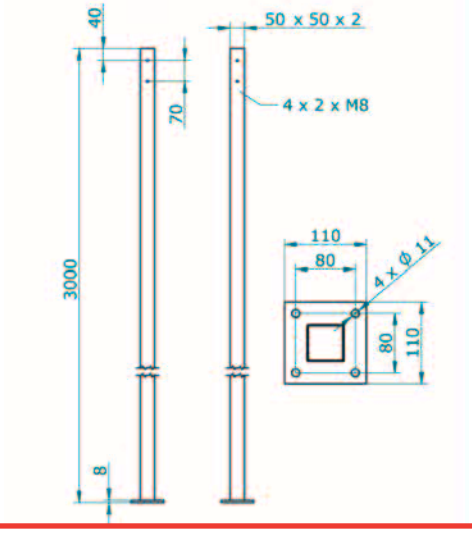

POLE 225CM

Pole, height 225cm, with a steel pole 50 x 50 x 2mm and a footplate 110 x 110 x 8mm. All sides with M8 pre-drilled fixing holes.

This product is finished with a grey (RAL 7035) powdercoating.

83.10.01.0225

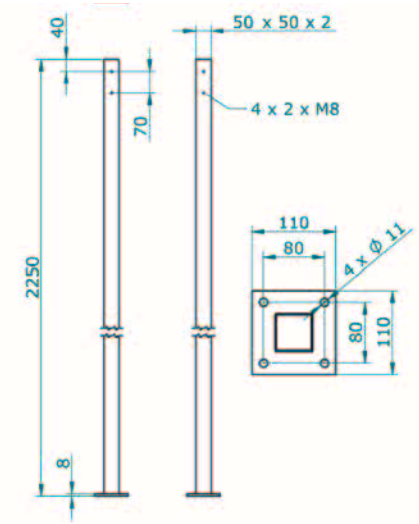

CEPRO COLUMNS

- Made from round tube
- Prepared for moutingplate
- Finished in red-lead
- Made with a footplate for a stable fitting to the floor

For all columns and poles special conditions apply. The freight charges will be calculated and invoiced separately on each order.

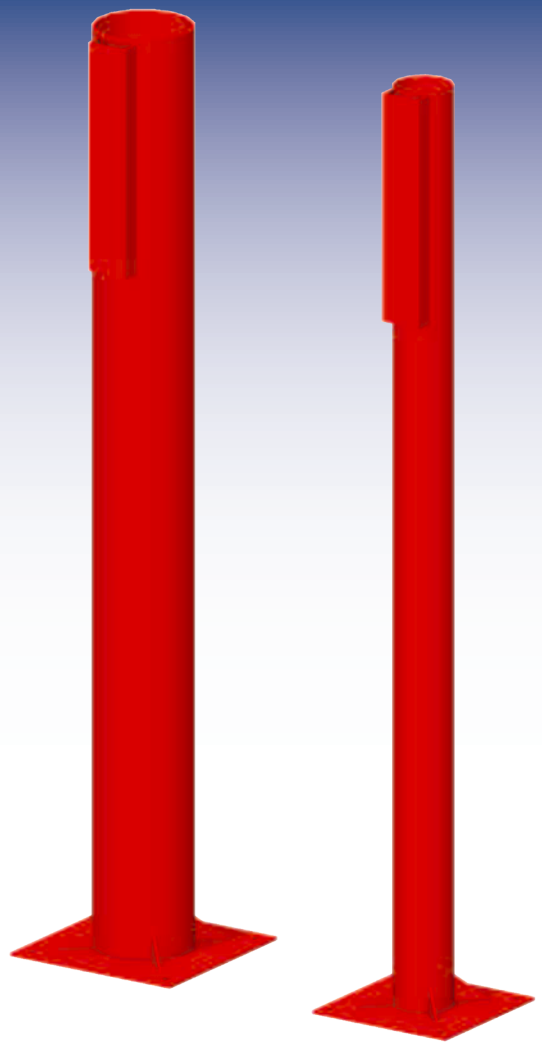

COLUMN 400CM

Column, height 4.000mm, made from round pipe 323.9mm Ø x 10mm (wall thickness).
Equipped with a footplate 600 x 600 x 15mm.

Finished in red-lead

83.25.02.0400

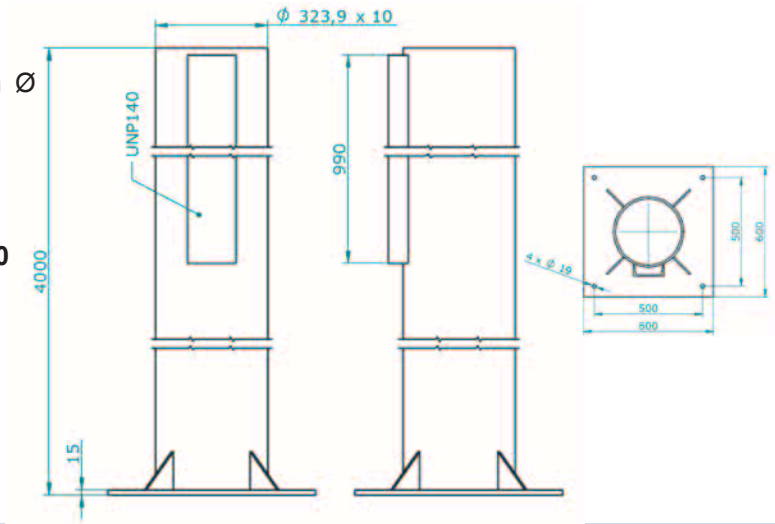

CEPRO®
LEADING IN WELDING SAFETY

CEPRO COLUMNS

- Made from round tube
- Prepared for mounting plate
- Finished in red-lead
- Made with a footplate for a stable fitting to the floor

For all columns and poles special conditions apply. The freight charges will be calculated and invoiced separately on each order.

COLUMN 400CM

Column, height 4.000mm, made from round pipe 193.7mm Ø x 6.3mm (wall thickness).
Equipped with a footplate 500 x 500 x 15mm.

Finished in red-lead.

83.25.01.0400

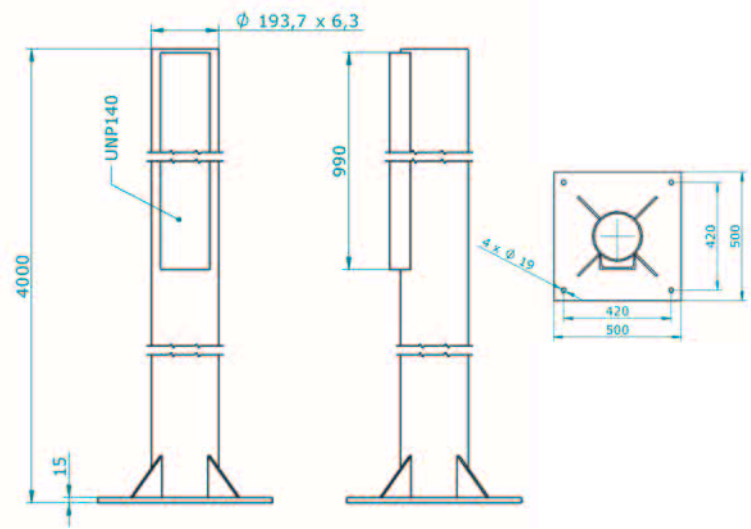

PLEASE NOTICE ! COMBINATION SWIVEL ARM AND COLUMNS

Orders for swivel arms (for strips or curtains) which will be fixed onto one of the CEPRO columns or poles, will only be delivered in the combinations as mentioned below

Swivel arm maximum length	Curtains max. height 250cm	Curtains max. height 500cm	Strips max. height 250cm	Strips max. height 500cm
2 meter	column 83.10.02.0300	column 83.10.02.0300	column 83.10.02.0300	column 83.20.01.0300
3 meter	column 83.10.02.0300	column 83.10.02.0300	column 83.20.01.0300	column 83.20.01.0300
4 meter	column 83.10.02.0300	column 83.20.01.0300	column 83.25.01.0400	column 83.25.01.0400
5 meter	column 83.20.01.0300	column 83.20.01.0300	column 83.25.01.0400	column 83.25.02.0400
6 meter	column 83.20.01.0300	column 83.20.01.0300	column 83.25.02.0400	column 83.25.02.0400

CEPRO RAIL SYSTEM

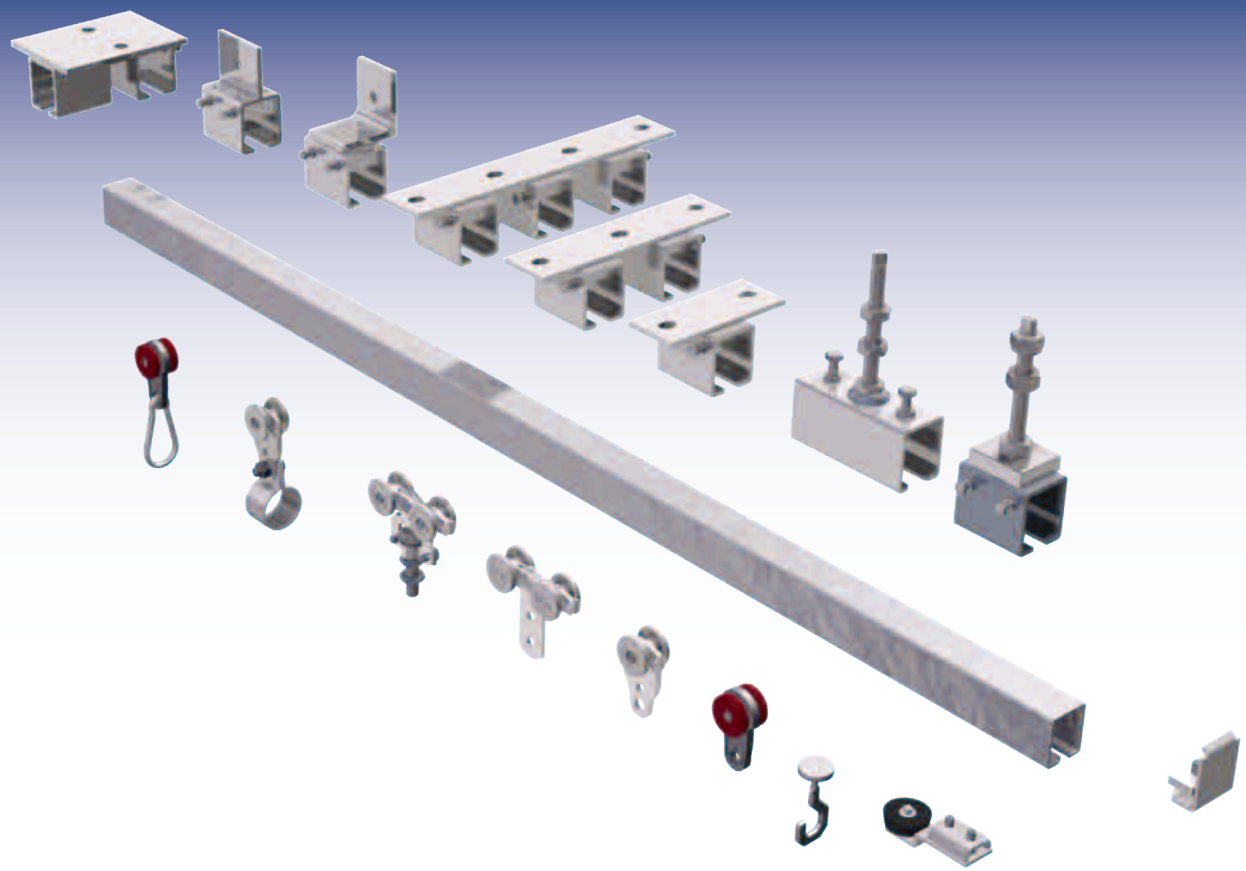

RAIL SUPPORT

Rail support with long bolt
M10 for rail 30 x 35mm

86.10.02

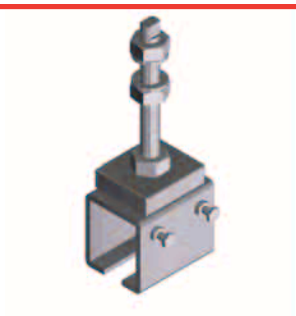

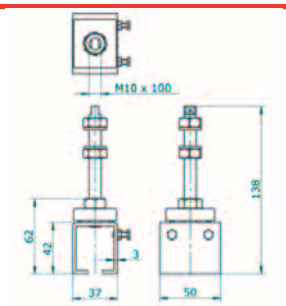

RAIL CONNECTOR

Rail connector with long bolt
M10. For rail 30 x 35mm

86.10.03

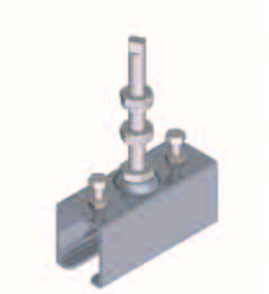

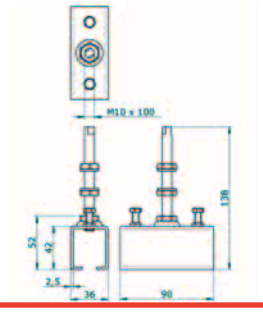

CEILING CONNECTOR

Ceiling rail connector for
single rail 30 x 35mm

86.10.20

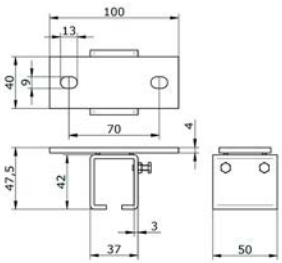

CEPRO RAIL SYSTEM

CEILING CONNECTOR
Ceiling rail connector for double rail 30 x 35mm

86.10.21

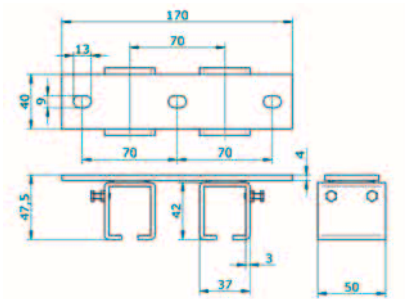

CEILING CONNECTOR
Ceiling rail connector for triple rail 30 x 35mm

86.10.22

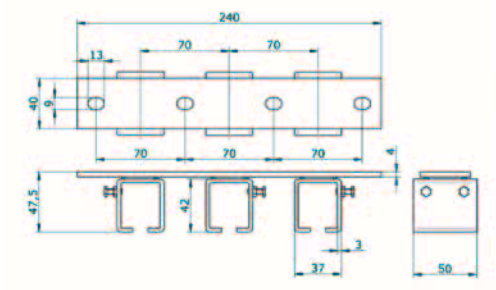

WALL CONNECTOR
Wall rail connector for rail 30 x 35mm

86.10.15

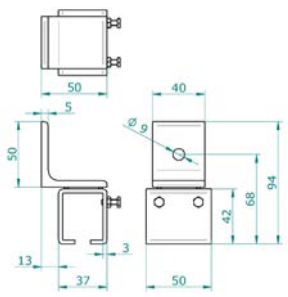

RAIL SUPPORT
Rail support for strengthening rail with metal strip.

86.10.25

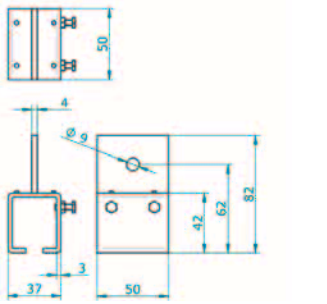

RAIL 30X35 MM
Rail 30 x 35mm per running meter, maximum length 6 meter.

86.10.00

For logistical reasons we advise the shipment of rail in bundles or in maximum length of 3 meters.

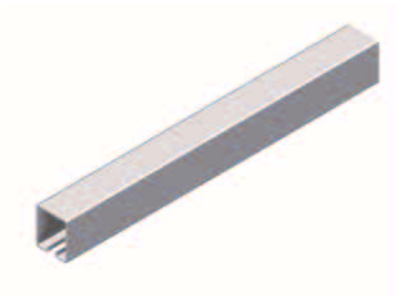

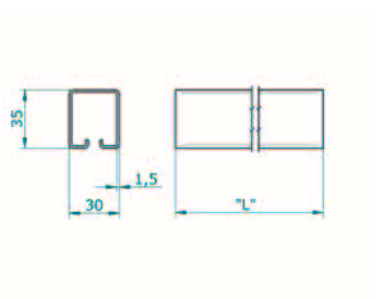

RAIL ELBOW
Rail 90° elbow, radius 500mm, for rail 30 x 35mm

86.10.01

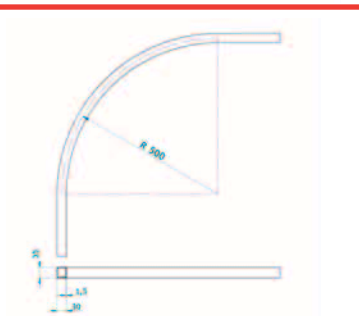

CEPRO RAIL SYSTEM

RUNNER PLASTIC
Two wheel runner plastic, for rail 30 x 35mm. Suitable for curtains.

86.10.10

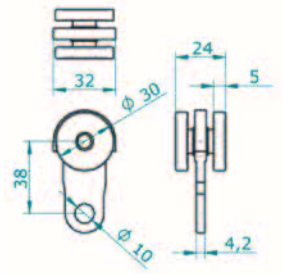

RUNNER METAL
Two wheel runner metal, for rail 30 x 35mm.

86.10.11

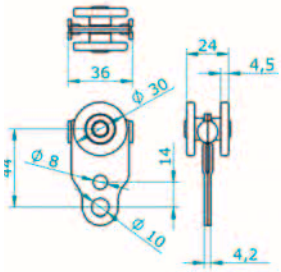

RUNNER METAL
Four wheel runner metal, for rail 30 x 35mm.
Load capacity 25kg.

86.10.13

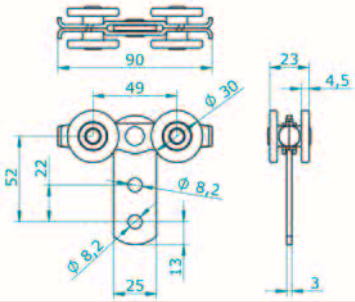

RUNNER METAL
Four wheel runner metal, for rail 30 x 35mm. With threaded end M10 bolt. For rail 30 x 35mm.
Load capacity 40kg.

86.10.17

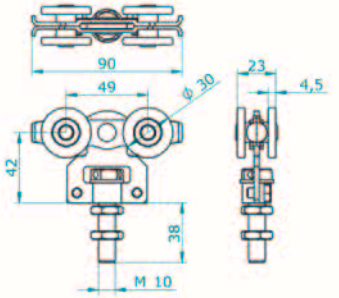

SNAP HOOK
Snap hook metal, to be used in combination with a runner to make a curtain separation slideable.

10.48.30

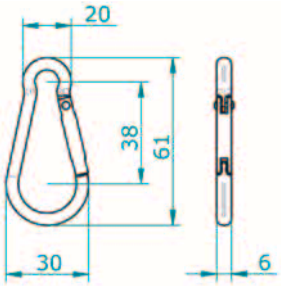

SLIDE HOOK
Slide hook plastic, for fixing a curtain into a rail 30 x 35mm. Only when not used frequently.

10.48.60

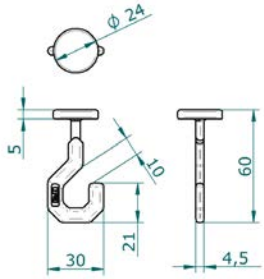

CEPRO®
LEADING IN WELDING SAFETY

CEPRO RAIL SYSTEM

ENDPIECE
End piece for rail 30 x 35mm

86.10.07

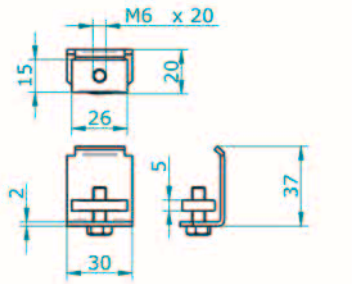

RAIL STOP
Rail stop with buffer for rail 30 x 35mm

86.10.08

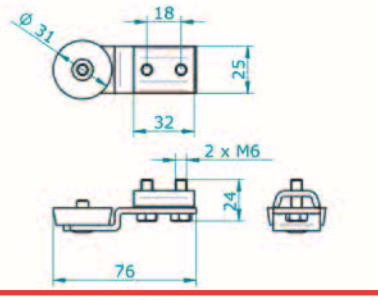

WALL SUPPORT
Wall support for rail support parts 86.10.02 or 86.10.03

86.10.04

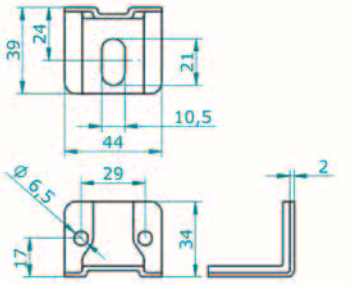

CEILING SUPPORT
Ceiling support for rail support parts 86.10.02 or 86.10.03, directly on to a horizontal surface.

86.10.05

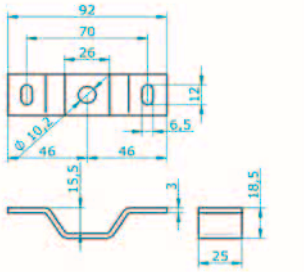

WALL SUPPORT
Side wall support for connecting a double rail or pipe to a wall or pole.

80.10.01

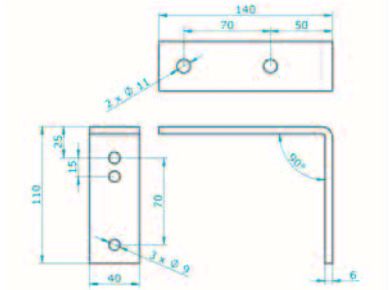

WALL SUPPORT
Heavy duty side wall support for connecting a double rail or pipe to a wall or pole.

80.10.02

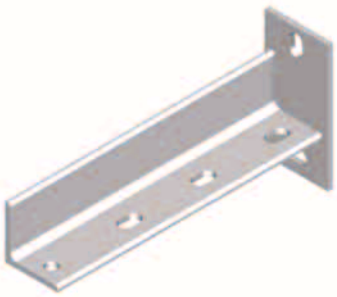

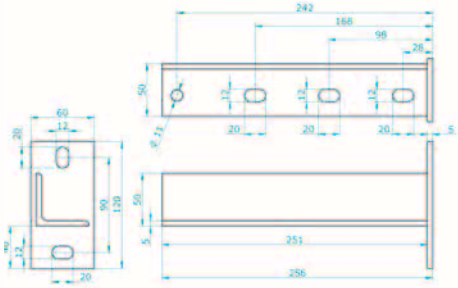

CEPRO TUBE SYSTEM

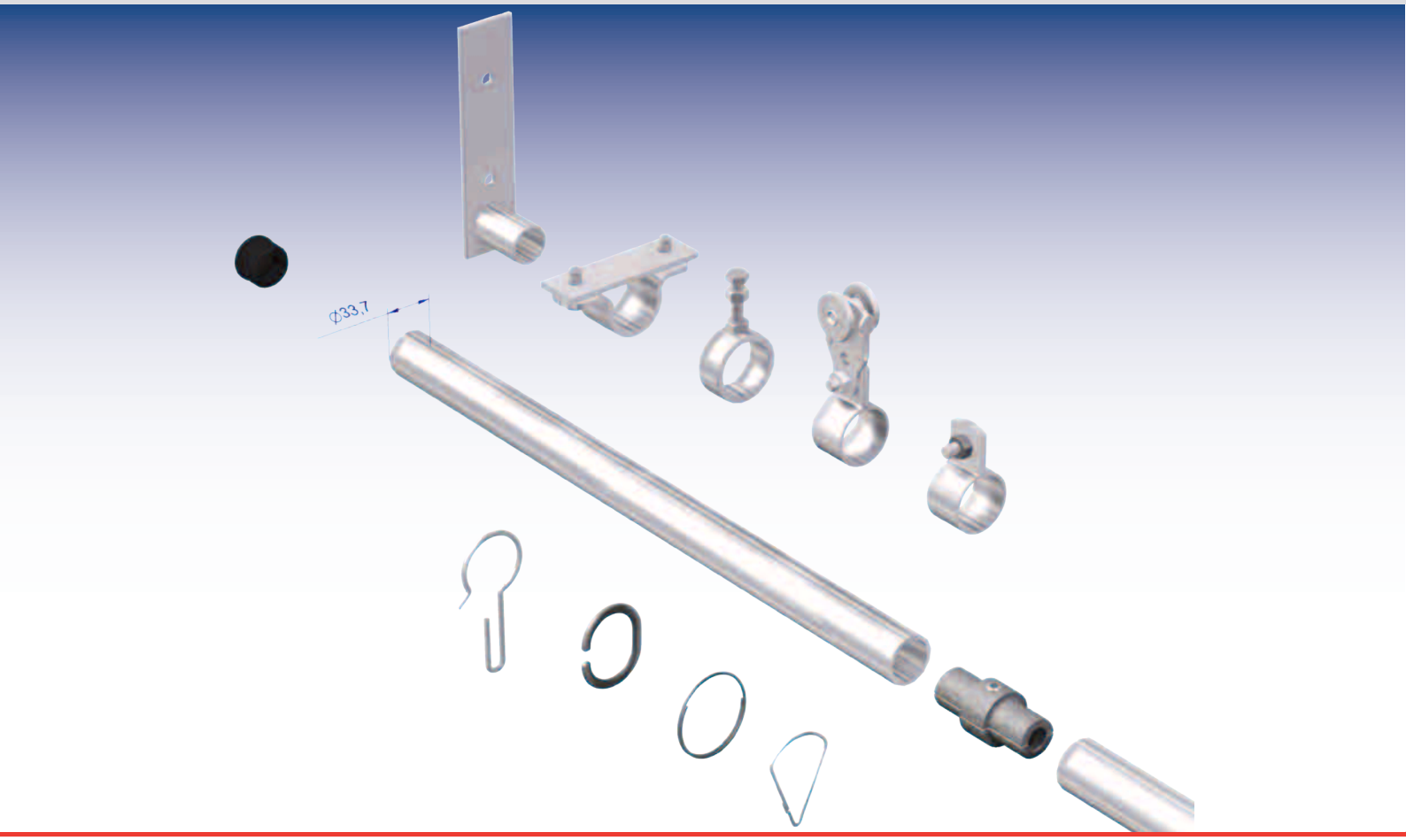

CEILING SUPPORT

Ceiling support, for connecting pipe max 34mm Ø to the wall or ceiling

86.40.10

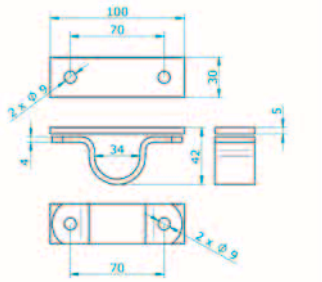

FLANGE

Flange, for connecting pipe (33.7mm Ø, 2.9mm wall thickness) to a wall or column

86.40.41

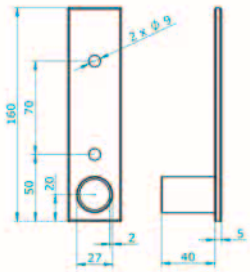

PIPE SUPPORT

Pipe support with bolt (M8 x 35mm) for pipe max 33.7mm Ø.

86.40.50

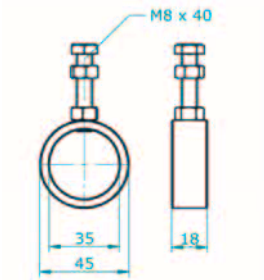

CEPRO®
LEADING IN WELDING SAFETY

CEPRO TUBE SYSTEM

TUBE

Pipe 33.7mm Ø, 2.9mm wall thickness per running meter, maximum length 6 meter

86.40.00

For logistical reasons we advise the shipment of tube in bundles or in maximum length of 3 meters.

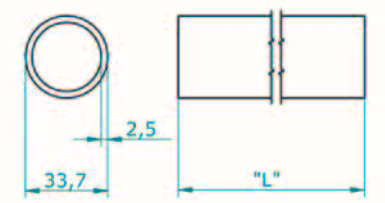

TUBE CONNECTOR

Pipe connector for pipe 33.7mm Ø. Only suitable for use next to a support

86.40.30

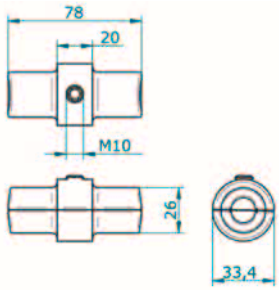

SUSPENSION RING

Suspension ring, steel, for pipe max 33.7mm Ø (packed per set of 7 pieces)

10.48.50.0007

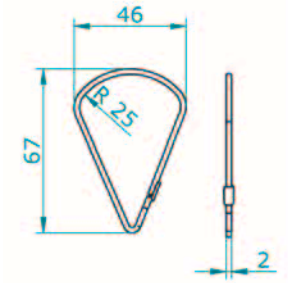

SUSPENSION RING

Suspension ring, plastic, for pipe max 33.7mm Ø.

10.48.40

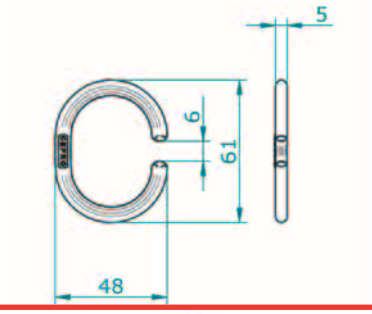

SUSPENSION HOOK

Suspension ring, metal, extra large for heavy duty purposes. For pipe max :

Ø 34 mm	**10.48.55**
Ø 50 mm	**10.48.58**
Ø 70 mm	**10.48.56**

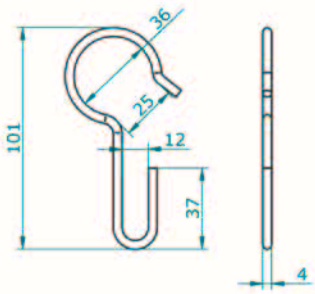

SUSPENSION RING

Stainless steel suspension ring.

10.48.52

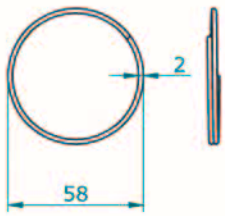

CEPRO TUBE SYSTEM

PIPE CLAMP

Pipe clamp, for pipe 33.7mm Ø. To be used in combination with a runner to make a strip separation slideable.

86.40.20

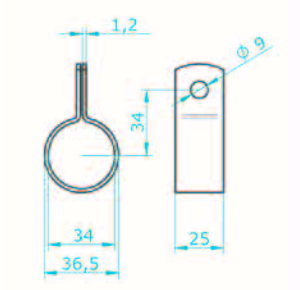

END CAP

End cap, for pipe 33.7mm Ø, 2.9mm wall thickness.

86.40.25

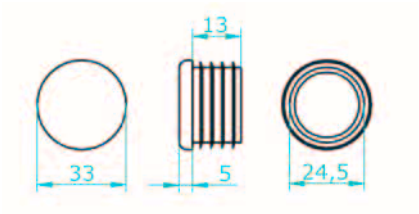

WALL SUPPORT

Wall support for rail support parts 86.10.02 or 86.10.03

86.10.04

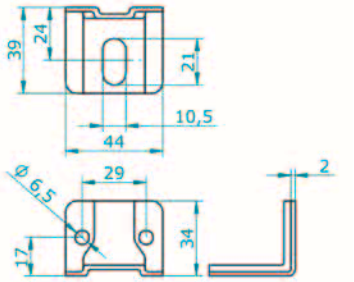

CEILING SUPPORT

Ceiling support for rail support parts 86.10.02 or 86.10.03, directly on to a horizontal surface.

86.10.05

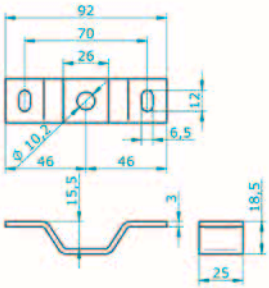

WALL SUPPORT

Side wall support for conncecting a double rail or pipe to a wall or pole

80.10.01

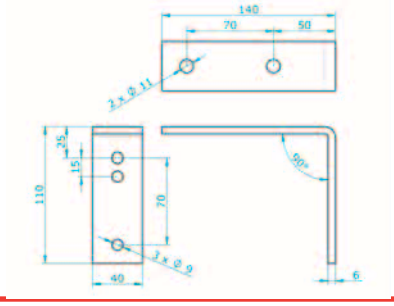

WALL SUPPORT

Heavy duty side wall support for connecting a double rail or pipe to a wall or pole

80.10.02

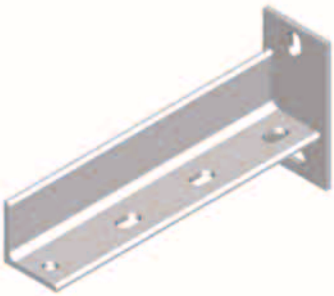

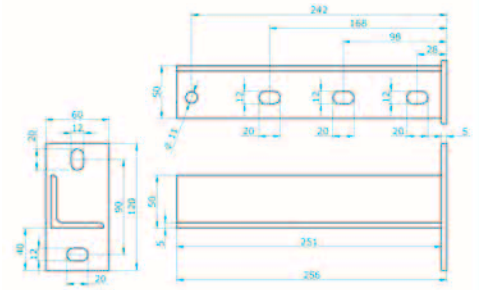

CEPRO®
LEADING IN WELDING SAFETY

CABLE REEL

A cable reel is ideal for screening off a workplace while at the same time allowing fast and easy access.

The spring recoiled wire with a length of up to 8 meters is easily pulled out of the drum to be attached to the tensioning device opposite on the other side. Curtains (max. drop is 2.00 meters) can be hung on the stretched cable. These can be easily moved, after which the wire can be retracted and the cable drum swung aside to allow easy access to the welding area.

Technical information

- Always hold the cable when you rewind it in order to avoid damage to the machine, injuries to people or to surrounding things.
- Do not open the spring housing box. The spring may only be repaired or replaced by qualified technicians.
- Any replacement of cable reel parts has to be done using original spare parts.
- Before replacing any part(s) we advise you to contact CEPRO.

.

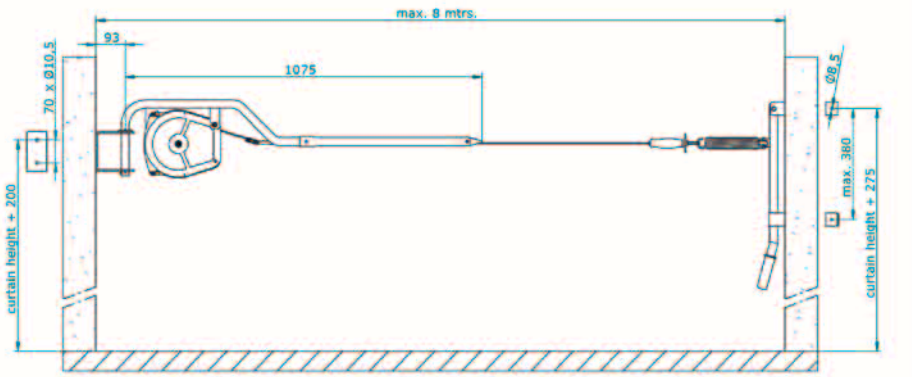

CEPRO®
LEADING IN WELDING SAFETY

CEPRO CABLE REEL

- Quick screening off of the workplace
- Easy to operate
- Cable length 8 meter
- Thickness cable 3mm
- Sturdy metal housing

CABLE REEL

- Maximum height curtain 200cm
- Including wall support
- Comes with special tensioning support

Cable reel, cable length max. 8 meter, **without** curtain **82.20.10**

CURTAINS

- Approved in accordance with EN-1598
- Standard width 140cm
- Fully seamed all-around
- 7 eyelets on one side measuring 140cm
- Snap-fasteners on both sides
- Including 7 free steel suspension rings

Cepro Orange-CE welding curtain
H. 160 x 140cm **16.15.16**

Cepro Orange-CE welding curtain
H. 180 x 140cm **16.15.18**

Cepro Orange-CE welding curtain
H. 200 x 140cm **16.15.20**

Cepro Green-9 welding curtain
H. 160 x 140cm **16.19.16**

Cepro Green-9 welding curtain
H. 180 x 140cm **16.19.18**

Cepro Green-9 welding curtain
H. 200 x 140cm **16.19.20**

Cepro Green-6 welding curtain
H. 160 x 140cm **16.16.16**

Cepro Green-6 welding curtain
H. 180 x 140cm **16.16.18**

Cepro Green-6 welding curtain
H. 200 x 140cm **16.16.20**

Cepro Bronze-CE welding curtain
H. 160 x 140cm **16.17.16**

Cepro Bronze-CE welding curtain
H. 180 x 140cm **16.17.18**

Cepro Bronze-CE welding curtain
H. 200 x 140cm **16.17.20**

SUSPENSION RING

- Stainless steel
- Closed round ring
- Thickness wire 3mm
- 58mm Ø

Stainless steel suspension ring for curtain. **10.48.52**

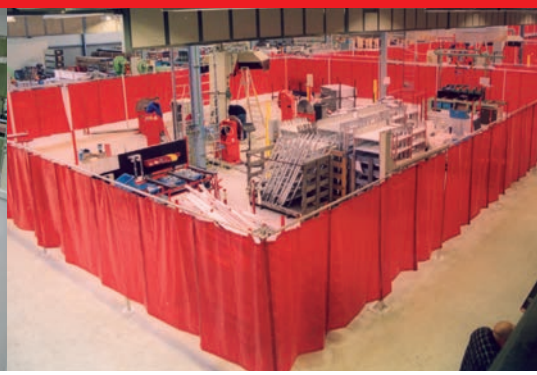

Maahantuonti ja markkinointi

Teknoexpertit Oy

Teknoexpertit Oy
Kapanalhonpolku 4, FI-20400 Turku
Puh. 0207 597 999
www.teknoexpertit.fi

WELDING CURTAINS

WELDING BLANKETS

WELDING SCREENS

WELDING BOOTHS GRINDING BOOTHS

OUTDOOR WELDING

CONSTRUCTION

Art. Nr. 96.21.36